KIMPLAS
PIPING SYSTEMS LTD

NORMA GROUP

ELECTROFUSION TAPPING TEE
FOR GAS / WATER - SDR11 (ISO S5)

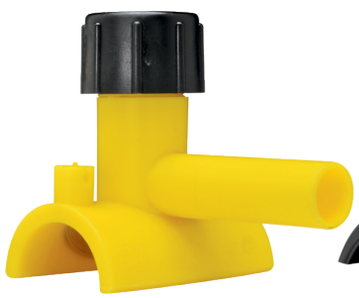

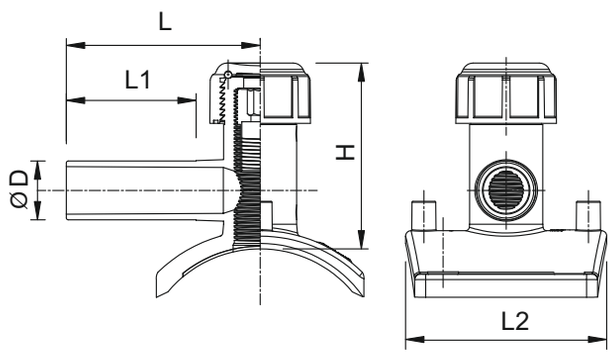

Kimplas Electrofusion Tapping Tees are manufactured in PE 100 (Black) material and are of SDR 11 rated (PN 16). For exact recommendations on compatibility, for welding with SDR 9 through SDR 21 or PN 6 through PN 16 pipe, refer Kimplas Technical Specifications Manual. Kimplas Electrofusion fittings are suitable for permanently connecting distribution MDPE 80 and PE 100 pipes, both in straight form as well as in coil form.

SPECIFICATION TABLE

dxD	Product Code	SP	Weight (gm)	H (mm)	L (mm)	L1 (mm)	L2 (mm)	FT	CT
d63-2”-75x32mm	TT63-2"-75X32BKB	24	271	128	106	71	110	70	4
d90-3"x32mm	TT90-3"X32BKB	20	281	123	106	71	110	80	4
d110-4"-140x32mm	TT110-4"-140X32BKB	20	358	117	106	71	110	80	4
d160-8"-213x32mm	TT160-8"-213X32BKB	20	292	123	106	71	110	80	4
d225-250x32mm	TT225-250X32BKB	18	359	112	130	71	110	80	4

BK8B - PE 80 Black - 4mm Pin
YEA - PE 80 Yellow - 4.7mm Pin

TRUSTLENE
A NORMA Group Company-
Kimplas Piping Systems Ltd. Brand

Note: SP=Standard Pack Quantity, FT=Fusion Time in Seconds, CT=Cooling Time in Minutes, SP and Weight are given for reference only

KIMPLAS
PIPING SYSTEMS LTD

NORMA GROUP

Standards

- PE Pipe Compatibility : IS:14885, ISO:4437, EN:1555-2, EN: 12201-2, ISO:4427, IS: 4984, DIN:8074.
- Complies with EN1555- Part 3 for Gas,
  EN12201- Part 3 for Water.
  AS/NZS 4129 for Gas & Water
  GIS-PL2-Part 4 for Gas

Common Applications

- Tapping from charged or uncharged network for House Service Connections.
- Branch connections.
- Tapping connections in areas difficult to access in narrow trenches.

Installation

- Joint preparation must be done as specified in the installation instructions. Pipe outside surface must be scraped to remove oxidized layer. Before fusing, scraped pipe- surface and matt area of the fittings must be cleaned to remove dirt and contamination. Complete Installation Manual may be downloaded.

Advantages

- Standard Operating Voltage -40V.
- Same fusion time for various SDR and PN rated pipes.
- Auto Temperature compensation for ambient conditions -5°C to + 40°C.
- Top load takes care of TT base radius matching (alignment) with pipe OD even in case of ovality of coiled pipes.
- Optimal fusion and cold zone for a sturdy joint.
- Pop-Up fusion indicators to indicate fusion process performance.
- Each Tapping Tee have brass cutter for cutting through mains pipe.
- Cutter retains the pipe coupon positively, never allows to slip into pipe.
- Long spigot outlets to perform second fusion when required.
- Permanent Batch Indicator, Fusion Time, Cooling Time, Raw Material Type and SDR marking.
- Each fitting individually packed to protect against contamination and oxidation.
- Each fitting with water-proof bar code to automatically feed fusion data to the Control-box for fusion process.

Contact Us

NORMA GROUP

Kimplas Piping Systems Limited - A member of NORMA Group -
B-20, MIDC , Ambad | 422010 Nashik | India | www.kimplaspiping.net
Tel : +91 253 6622701/2 | Fax: +91 253 6604710
sales.kimplas@normagroup.com

bsi. ISO 9001 Quality Management FM664215 | ISO 14001 Environmental Management EMS664216 | OHSAS 18001 Occupational Health and Safety Management OHSS664217 | DVGW product | WRAS APPROVED MATERIAL | 2 HDPE

TRUSTLENE
A NORMA Group Company-
Kimplas Piping Systems Ltd. Brand

Disclaimer : Kimplas reserve the right to modify product without prior notice, as part of its continual improvement programme. Whilst every affort is taken to ensure the accuracy of information contained in the data Sheet, Kimplas accepts no liability for matters arising as a result of errors or omissions.